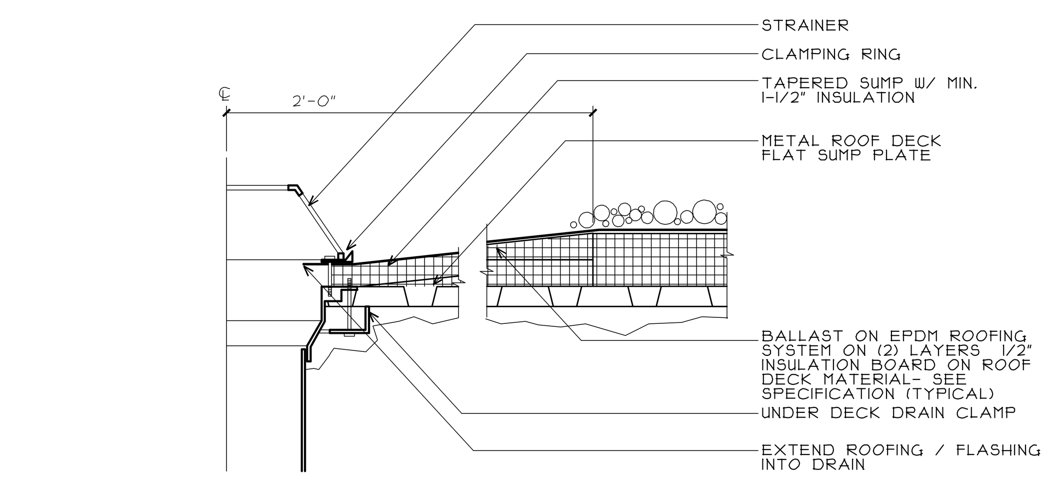

4 A7.2 DRAIN SUMP DETAIL
SCALE: 1 1/2" = 1'-0"

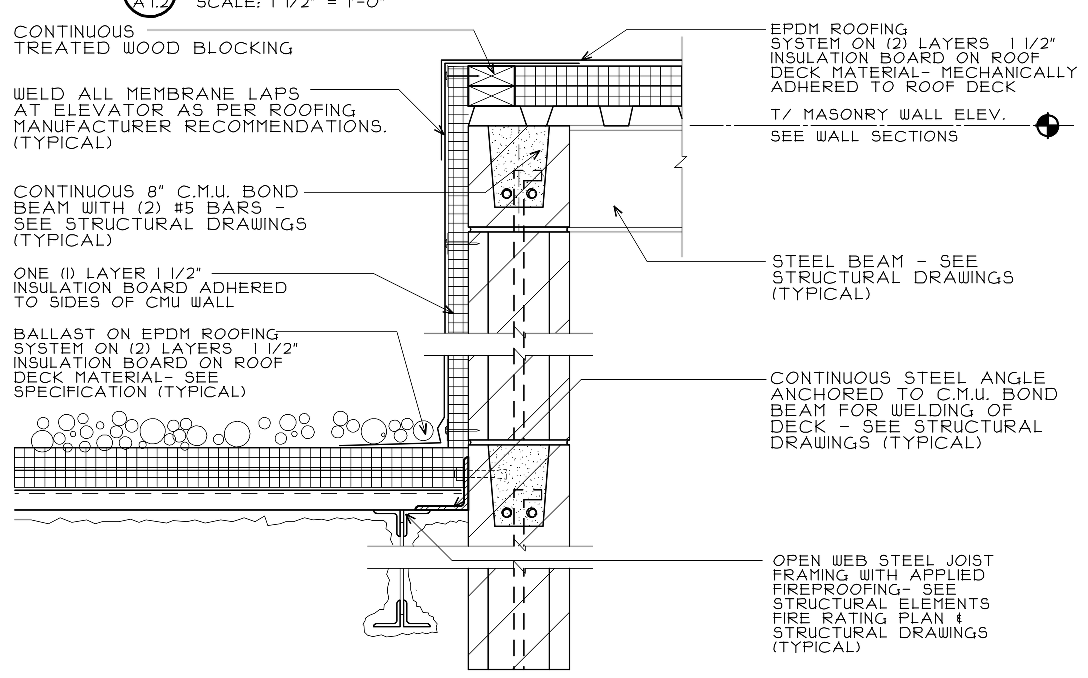

8 A7.2 ROOF DETAIL
SCALE: 1 1/2" = 1'-0"

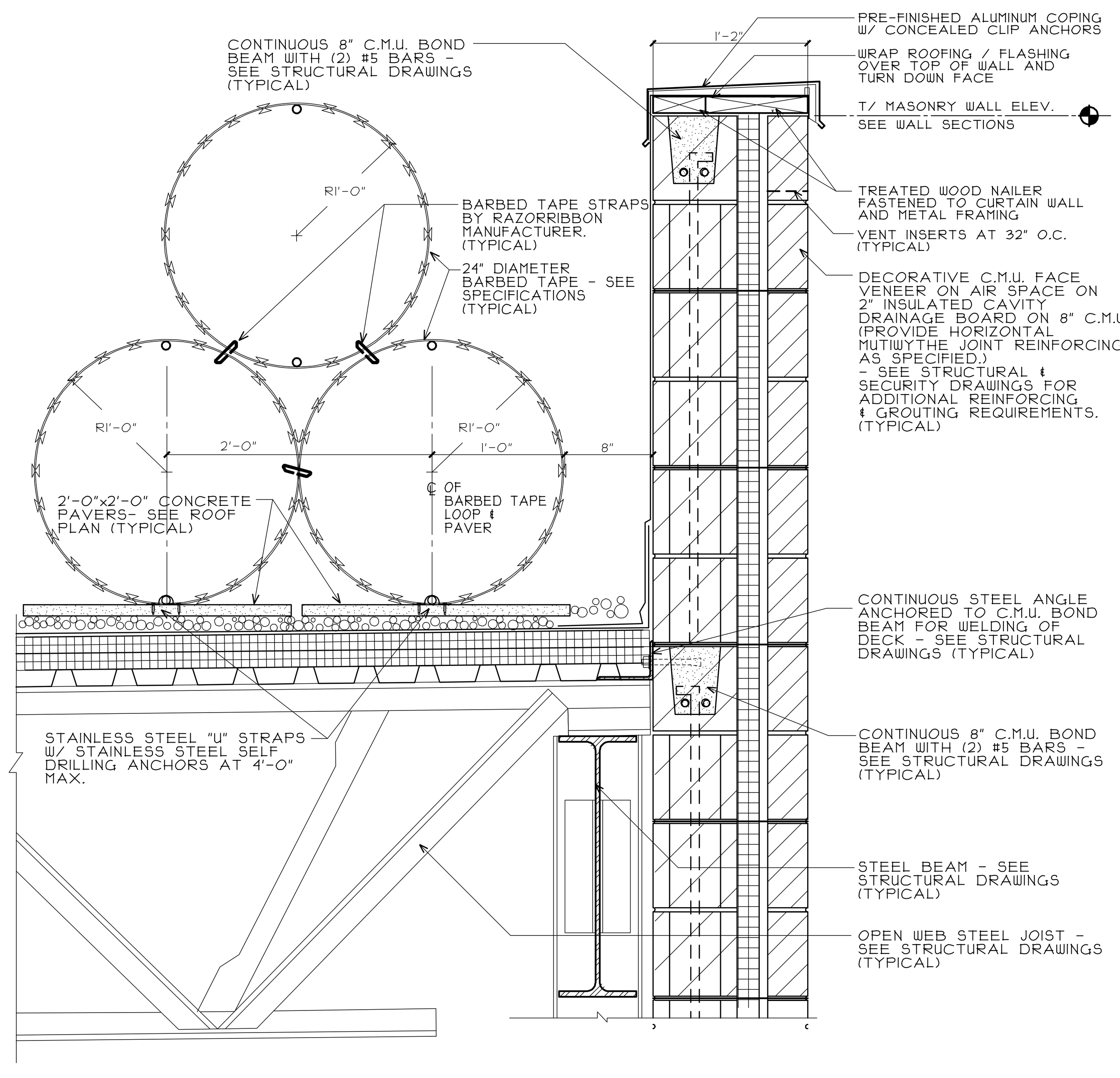

12 A7.2 ROOF DETAIL
SCALE: 1 1/2" = 1'-0"

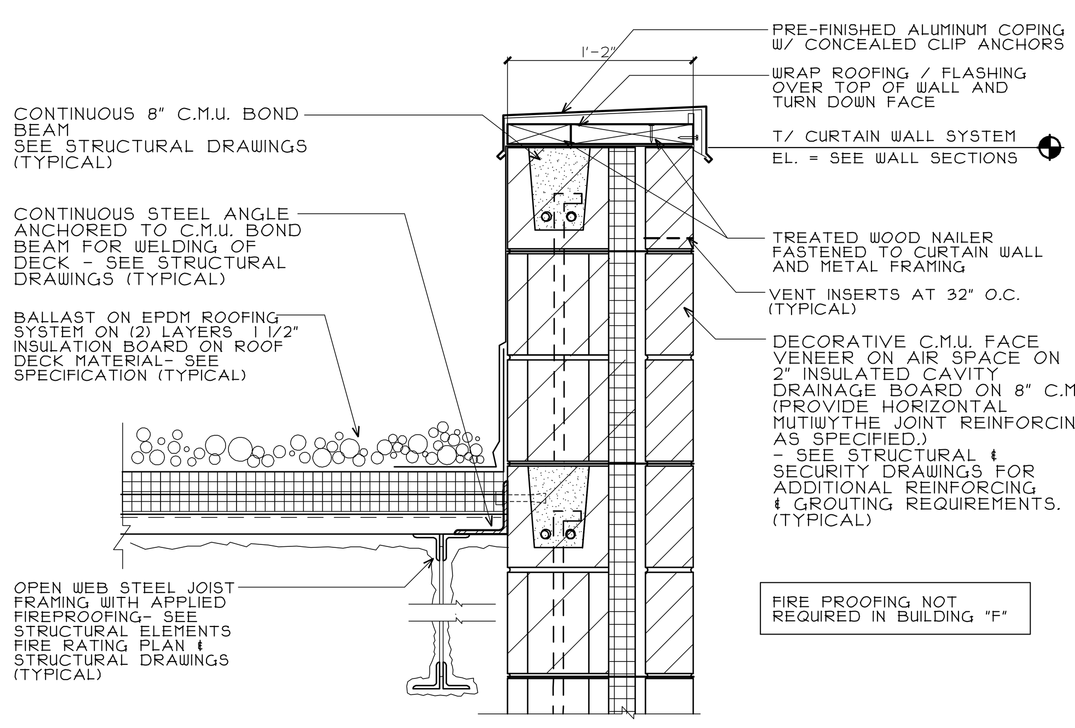

16 A7.2 ROOF DETAIL
SCALE: 1 1/2" = 1'-0"

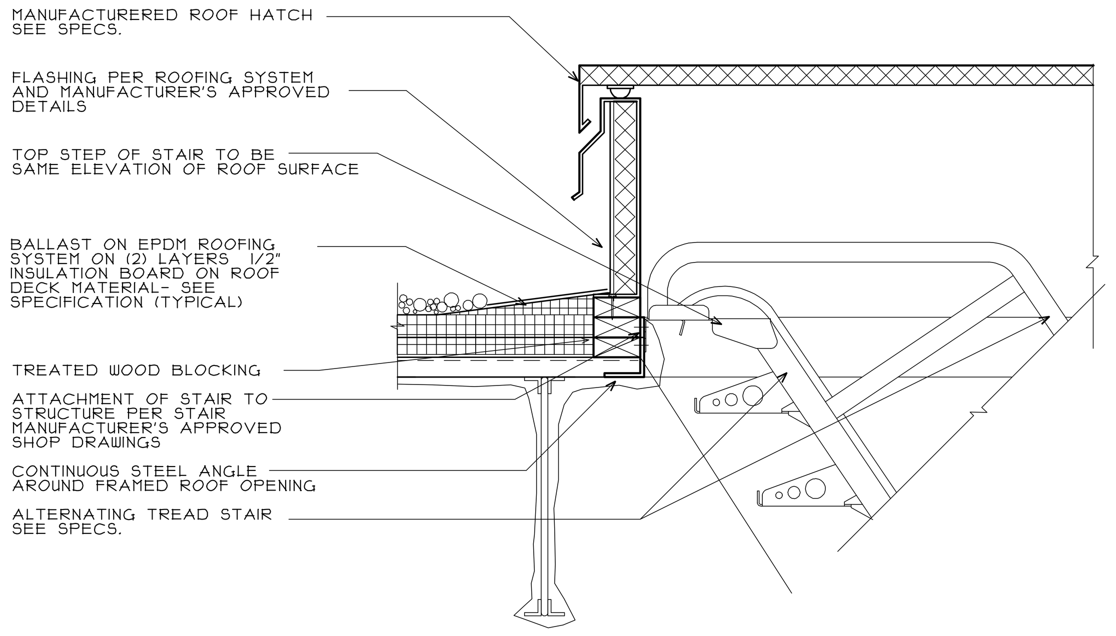

3 A7.2 HATCH / CURB DETAIL
SCALE: 1 1/2" = 1'-0"

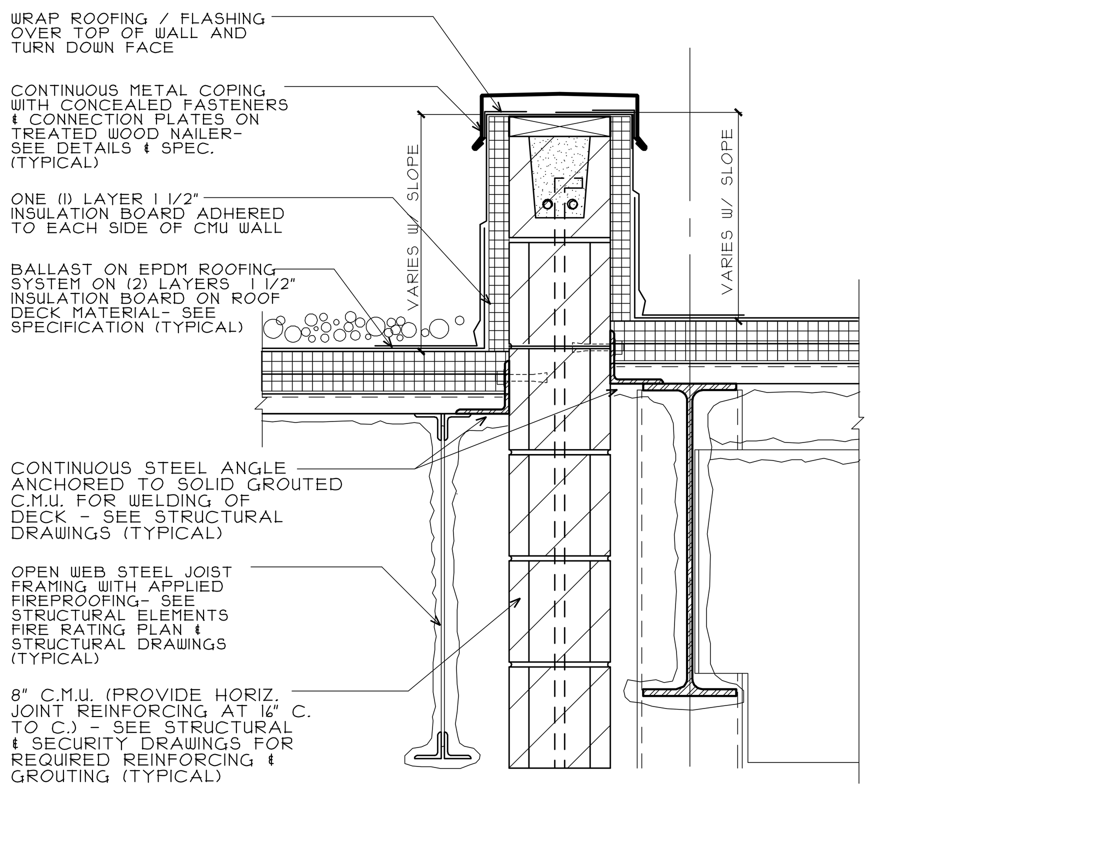

7 A7.2 ROOF DETAIL
SCALE: 1 1/2" = 1'-0"

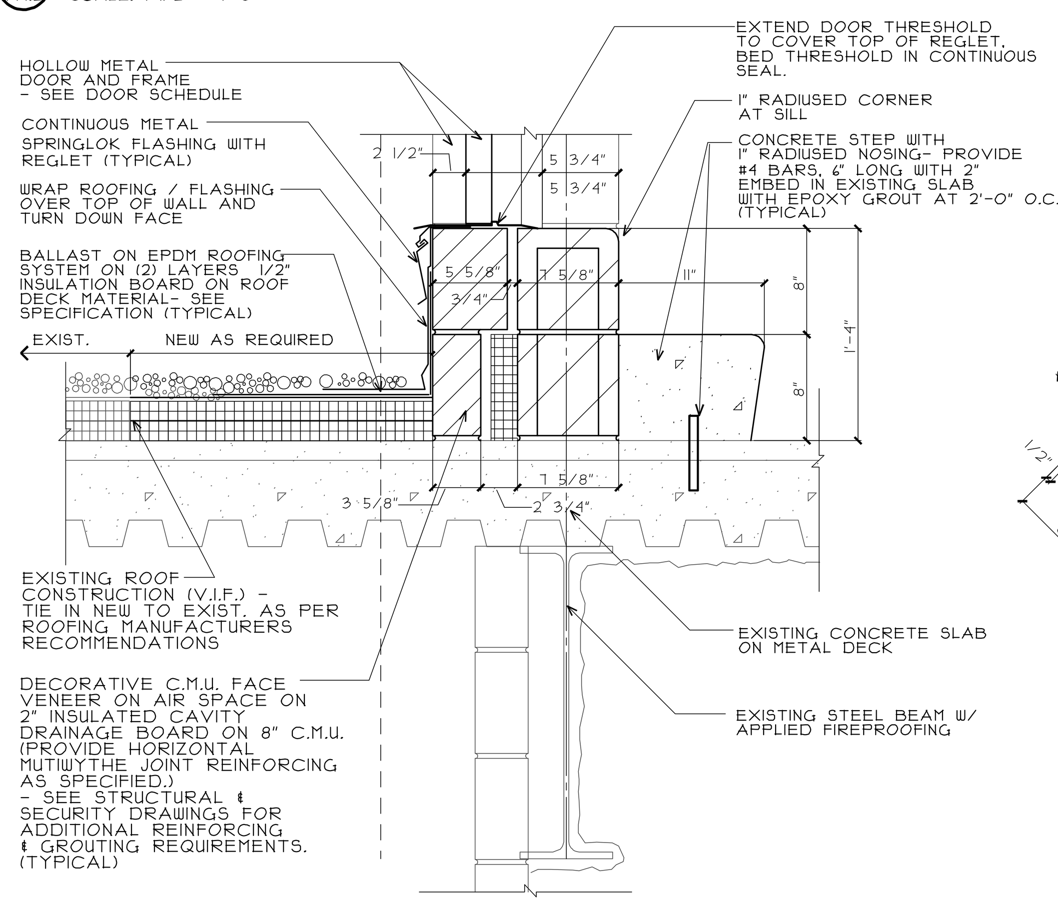

11 A7.2 ROOF DETAIL
SCALE: 1 1/2" = 1'-0"

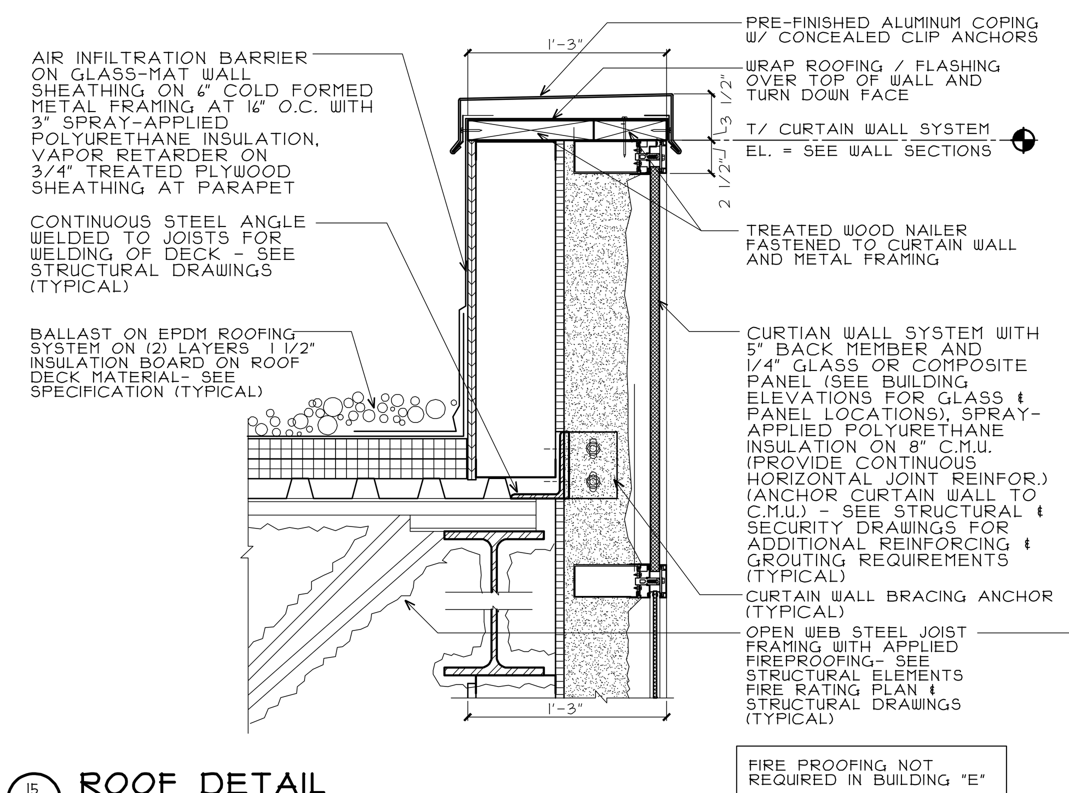

15 A7.2 ROOF DETAIL
SCALE: 1 1/2" = 1'-0"

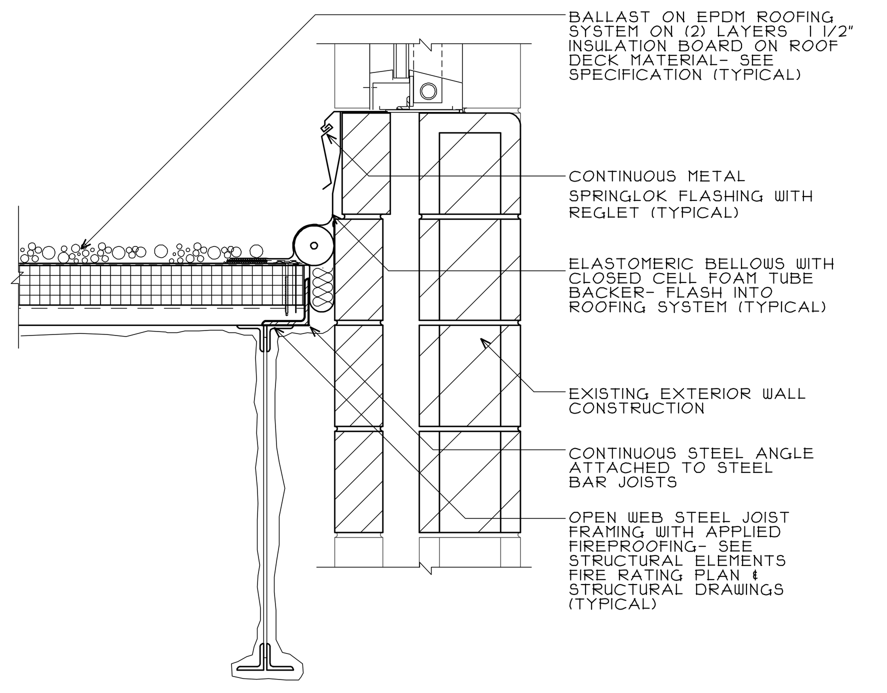

2 A7.2 COPING DETAIL
SCALE: 1 1/2" = 1'-0"

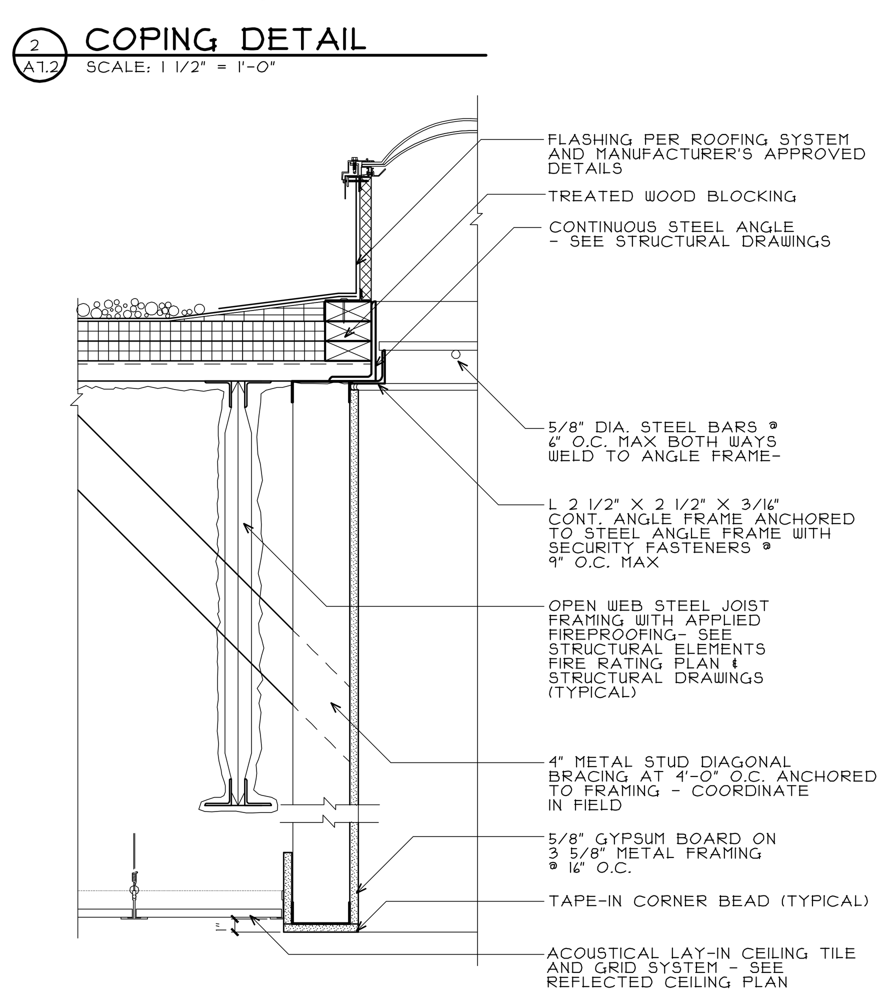

6 A7.2 ROOF DETAIL
SCALE: 1 1/2" = 1'-0"

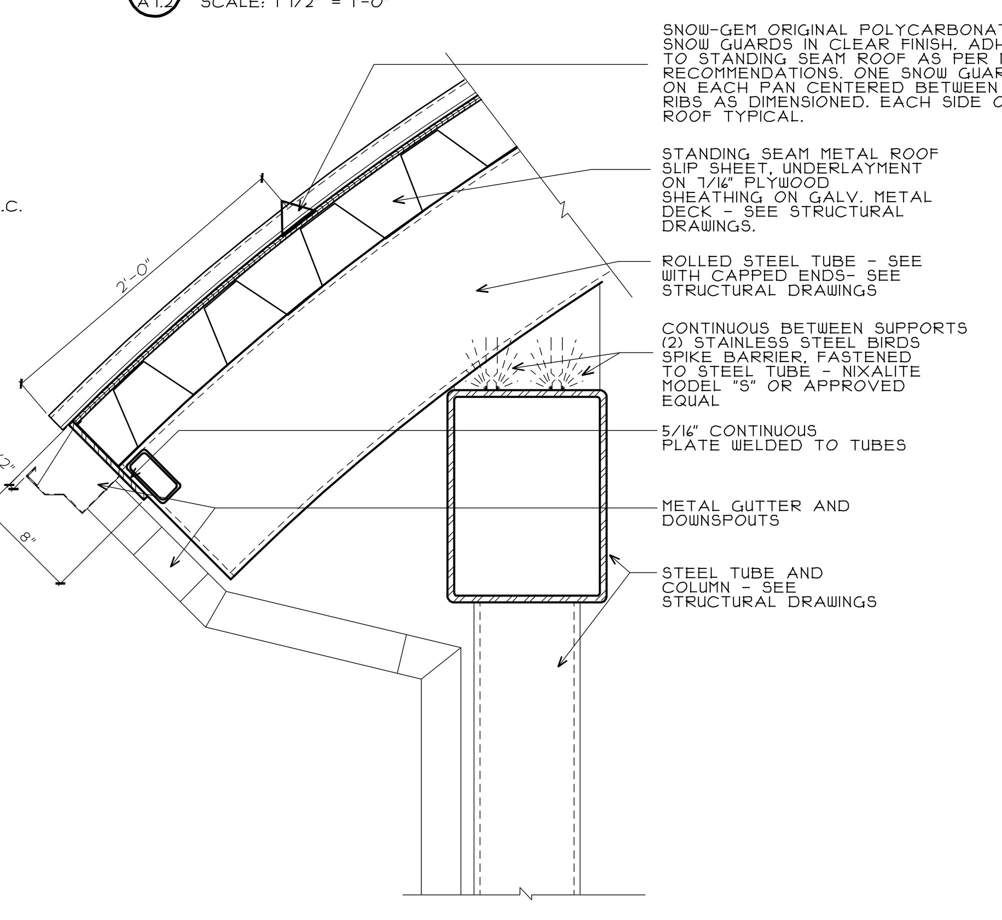

10 A7.2 ROOF DETAIL
SCALE: 1 1/2" = 1'-0"

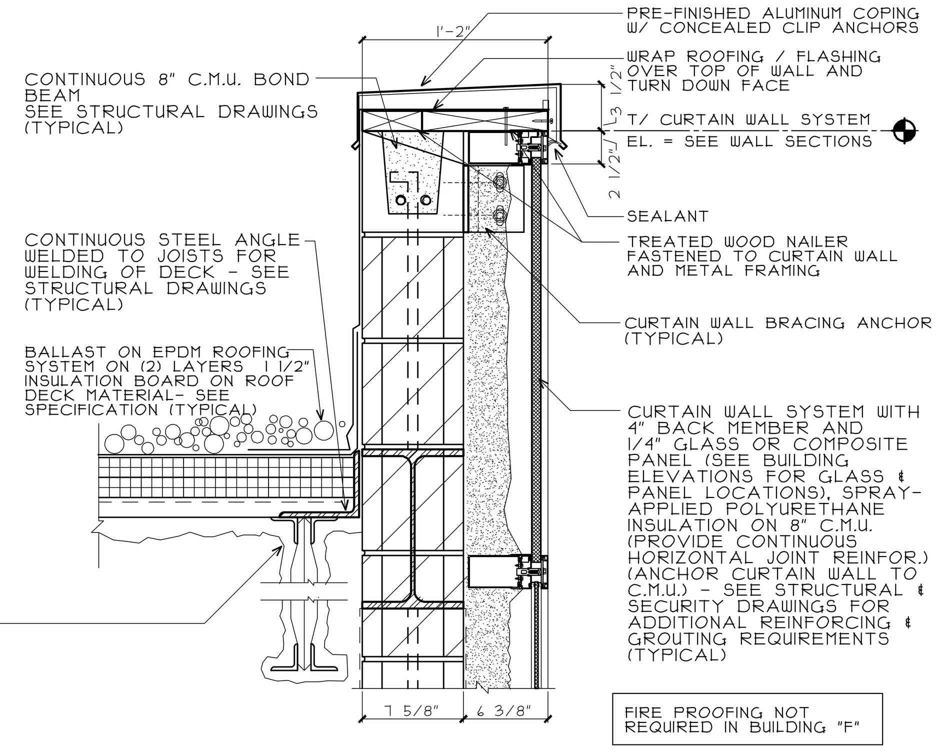

14 A7.2 ROOF DETAIL
SCALE: 1 1/2" = 1'-0"

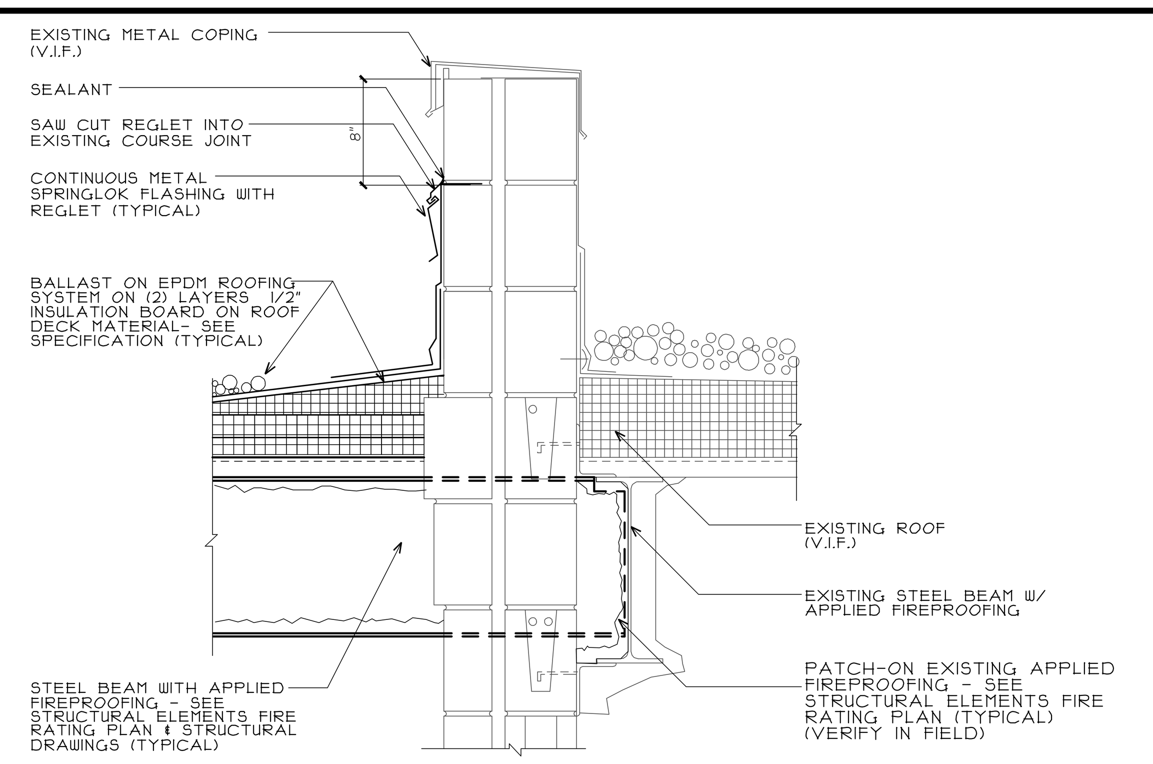

1 A7.2 COPING DETAIL
SCALE: 1 1/2" = 1'-0"

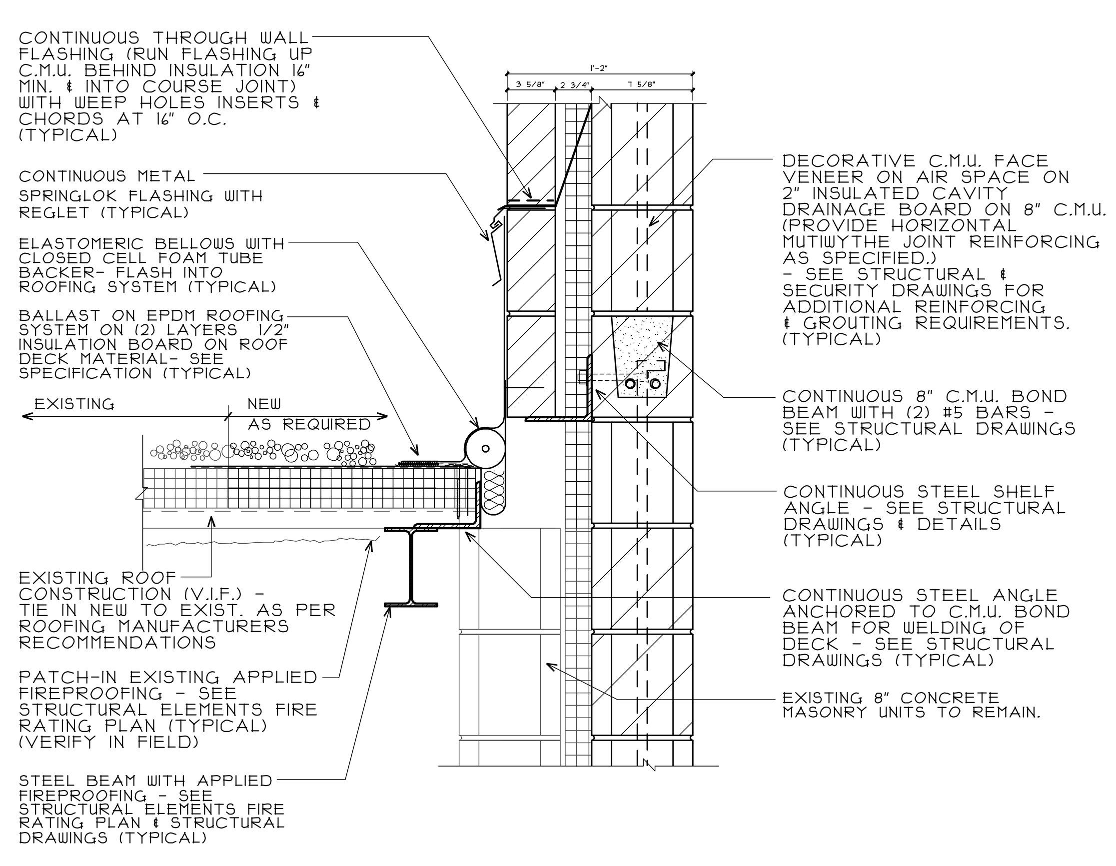

5 A7.2 ROOF DETAIL
SCALE: 1 1/2" = 1'-0"

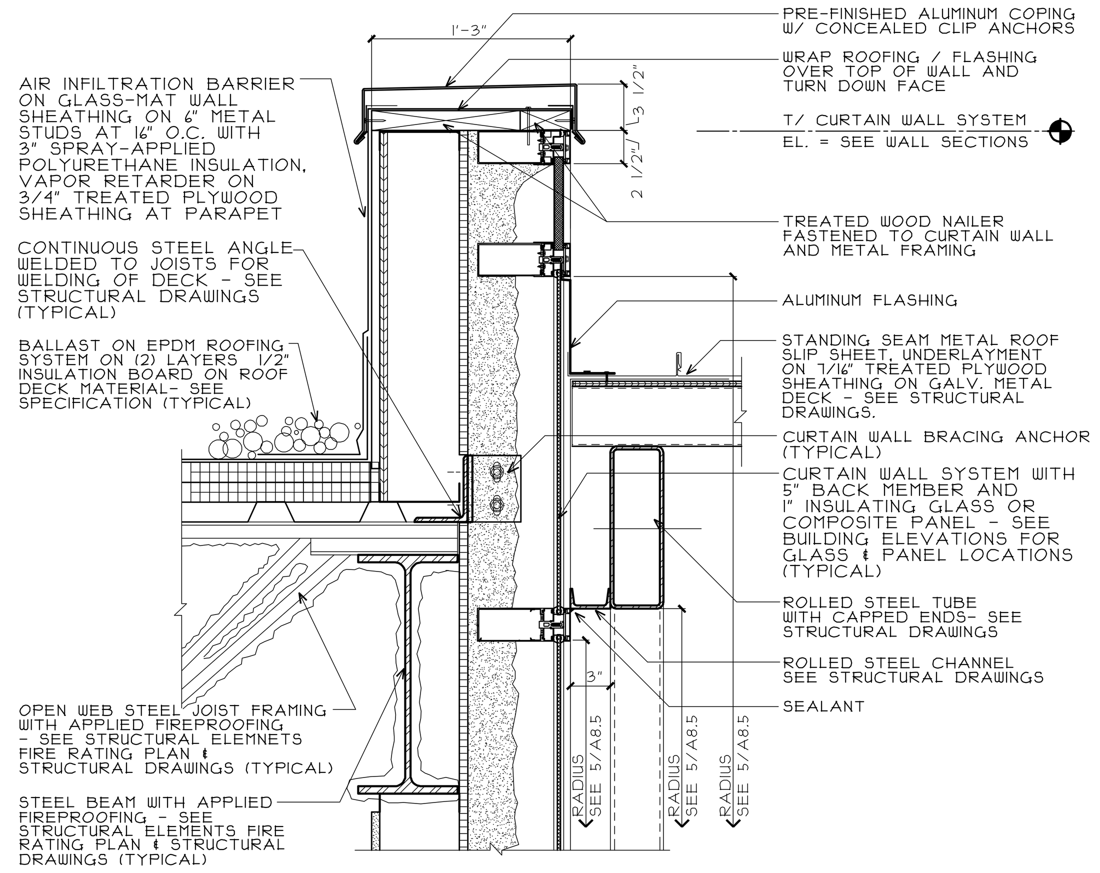

9 A7.2 ROOF DETAIL
SCALE: 1 1/2" = 1'-0"

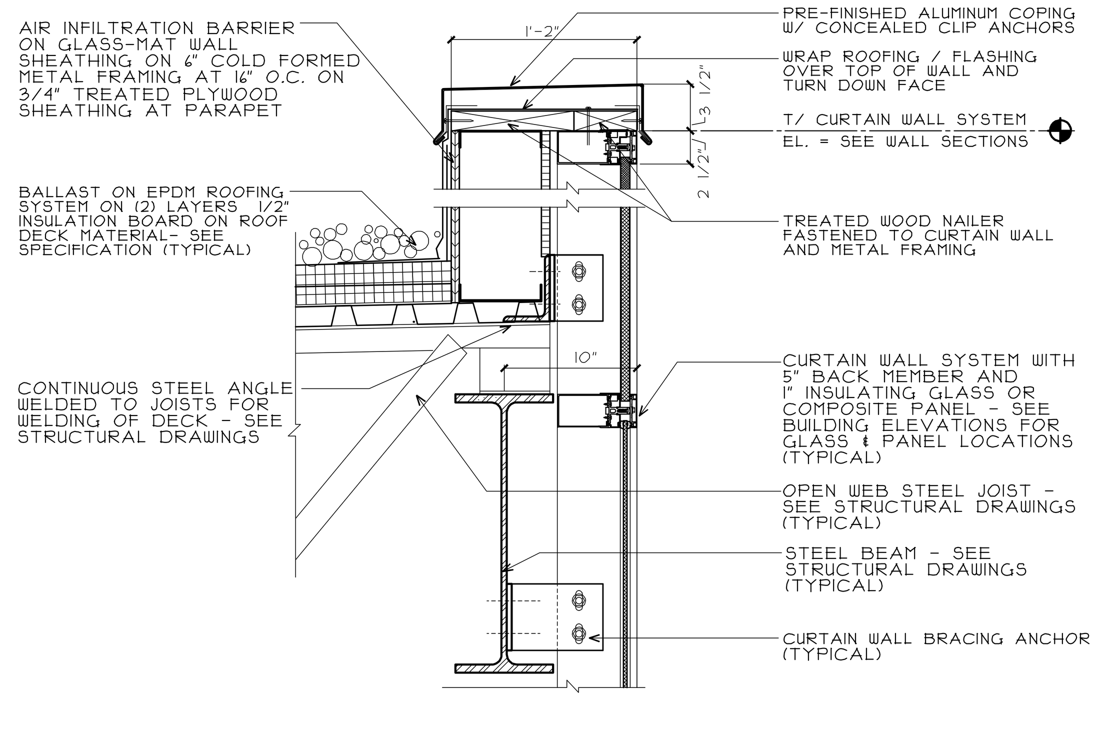

13 A7.2 ROOF DETAIL
SCALE: 1 1/2" = 1'-0"

CIVIL ENGINEERS:
SMITH ENGINEERING CONSULTANTS, INC.
323 ALANA DRIVE
NEW LENOX, ILLINOIS 60451
815 462.9324

CORRECTIONS & SECURITY CONSULTING:
KIMME & ASSOCIATES
510 SOUTH STALEY ROAD, SUITE C
CHAMPAIGN, ILLINOIS 61822
217 351.7036

ARCHITECT OF RECORD:
STROMSLAND AND DE YOUNG, ARCHITECTS, INC.
168 NORTH OTTAWA STREET
JOLIET, ILLINOIS 60432
815 727.1311
LICENSE # 184-000437

PROJECT MANAGEMENT, STRUCTURAL & MEP ENGINEERS:
TENG & ASSOCIATES, INC.
ENGINEERS/ARCHITECTS/PLANNERS
205 NORTH MICHIGAN AVENUE
CHICAGO, ILLINOIS 60601
312 616.0000

ADULT DETENTION FACILITY EXPANSION
THE COUNTY OF WILL
95 SOUTH CHICAGO STREET
JOLIET, ILLINOIS 60432
WILL COUNTY BOARD
WILL COUNTY PUBLIC BUILDING COMMISSION

NO.	DATE	ISSUED FOR:
-	12/22/06	GENERAL CONSTRUCTION RELEASE
-	11/20/06	BID RELEASE NO.6
-	12/01/06	BID RELEASE NO.5 FOR CONSTRUCTION
-	9/11/06	BID RELEASE NO.5
-	10/10/06	BID RELEASE NO.4 FOR CONSTRUCTION
-	8/14/06	BID RELEASE NO.4
II	6/01/06	BID RELEASE NO.2 FOR CONSTRUCTION
II	3/29/06	BID RELEASE NO.2

DRAWN | CHECKED | APPROVED | BY

PROJECT NO. 090413

CAUTION: DO NOT SCALE DRAWINGS. THE REPRODUCTION MAY BE AT A SIZE DIFFERENT FROM ORIGINALLY DRAWN. THE OWNER AND STROMSLAND & DE YOUNG ASSUME NO RESPONSIBILITY FOR THE INCORRECT SCALING. UNAUTHORIZED REPRODUCTION OR REUSE IS STRICTLY PROHIBITED. NOT PUBLISHED-ALL RIGHTS RESERVED. STROMSLAND & DE YOUNG EXPRESSLY DISCLAIMS RESPONSIBILITY ARISING FROM UNAUTHORIZED USE OF THESE DRAWINGS AND NOTES. AUTHORIZATION MUST BE IN WRITING.
© 2006 STROMSLAND & DE YOUNG, ARCHITECTS, INC.

ROOF DETAILS

A7.2